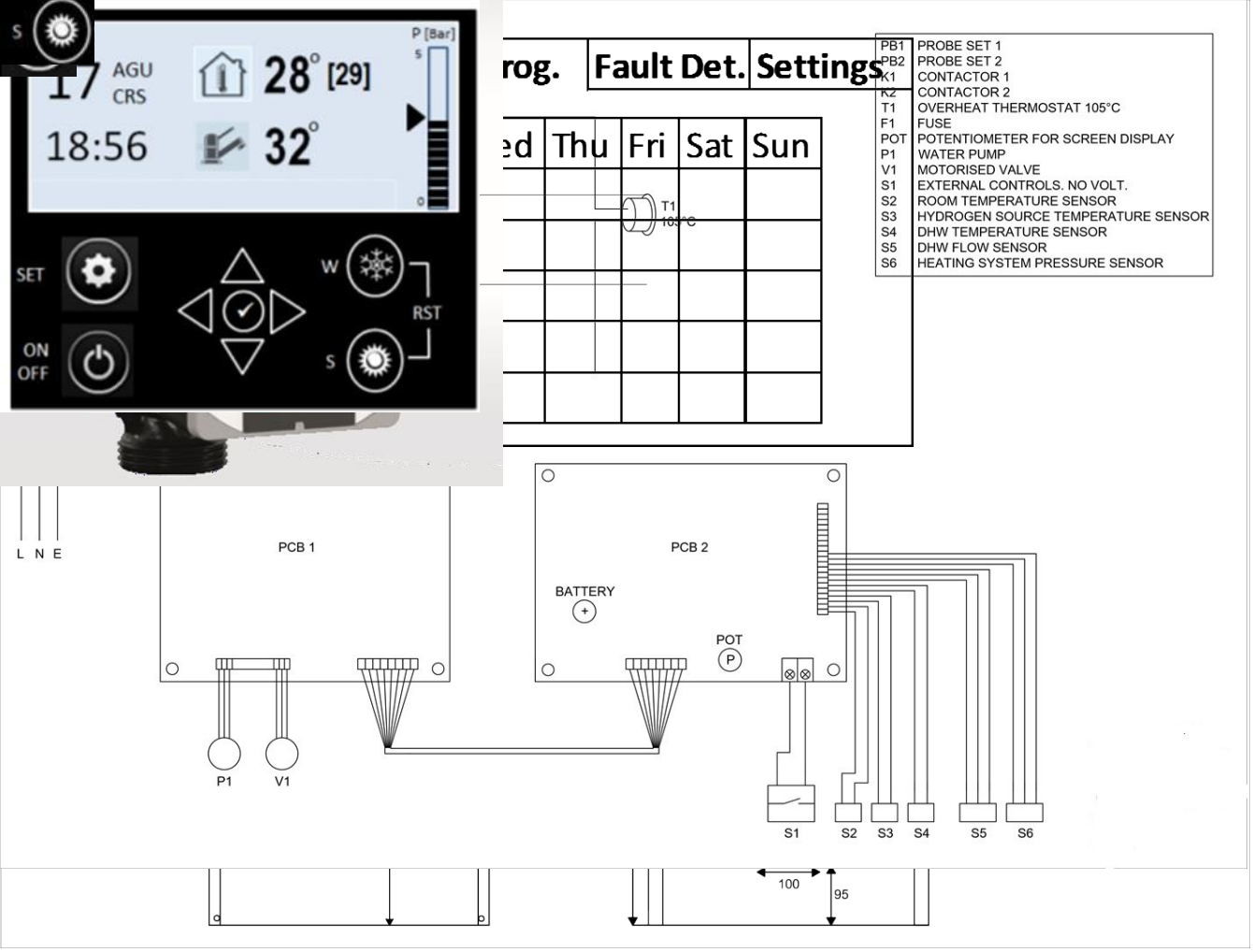
AGU
CRS
28° [29]
18:56
32°
P [Bar]
SET
ON
OFF
W
RST
S
rog.
Fault Det.
Settings
ed
Thu
Fri
Sat
Sun
T1
105°C
PB1 PROBE SET 1
PB2 PROBE SET 2
K1 CONTACTOR 1
K2 CONTACTOR 2
T1 OVERHEAT THERMOSTAT 105°C
F1 FUSE
POT POTENTIOMETER FOR SCREEN DISPLAY
P1 WATER PUMP
V1 MOTORISED VALVE
S1 EXTERNAL CONTROLS. NO VOLT.
S2 ROOM TEMPERATURE SENSOR
S3 HYDROGEN SOURCE TEMPERATURE SENSOR
S4 DHW TEMPERATURE SENSOR
S5 DHW FLOW SENSOR
S6 HEATING SYSTEM PRESSURE SENSOR
L N E
PCB 1
PCB 2
BATTERY
POT
P1
V1
S1
S2
S3
S4
S5
S6
100
95

E300

1. Contents

1. Contents....2
2. Introduction....5
   2.1. Important Notes....5
3. Basic Operation of the Lotus E300 heat unit....8
   3.1. Storage, Unpacking and Handling of the Lotus E300 heat unit....9
   3.2. Contents Check List....9
4. Technical Data Sheet....10
   4.1. Mechanical Installation....11
   4.2. Hydraulic Installation....12
   4.3. Electrical installation....14
5. General Requirements....16
   5.1. Location of the Lotus E300 heat unit....16
   5.2. Water Supply to the Lotus E300 heat unit....16
   5.3. Pipework & Fittings....17
   5.4. Treatment of the Primary (Central Heating) Circulating System....17
   5.5. Sealed Primary Systems....17
6. Installation – General....18
   6.1. Positioning the Lotus E300 heat unit....18
   6.2. Removal of Panels....18
   6.3. Cable Entry Positions....18
   6.4. Programmable PCB Room Thermostat for the Lotus E300 heat unit....19
7. Installation – Plumbing....20
   7.1. Pipe Fittings....20
   7.2. Outlet Pipework....20
   7.3. DHW Outlets....20
   7.4. Discharge Pipework....20
   7.5. Primary (Central Heating) Pipework....24
8. Installation – Electrical....26
   8.1. Important Notes....26
   8.2. Boiler Connection....26
   8.3. Programmable Room Thermostat (not supplied)....26
9. Pre Commissioning....28
   9.1. Preliminary Electrical Checks....28

10.1. Check Operation of the Lotus E300 heat unit....28
11. Commissioning....29
11.1. Filling the Lotus E300 heat unit....29
11.2. Filling the Sealed System Primary Circuit....30
11.3. Check the Operation of the Safety Valves....31
11.4. Set the Programmable PCB Thermostat....31
11.5. Demonstration to User....31
12. WILO KSL/7-50/SC Para Pump....33
12.1. Starting the pump....33
12.2. Operating panel....33
Indicator lights (LEDs)....33
12.3. Alarm or warning....34
12.4. Control modes....34
12.5. Changing from recommended to alternative pump setting....35
12.6. Selecting the control modes....35
12.7. Setting the product....36
Lock/unlock the button....37
Activating factory setting....37
13. Maintenance and Servicing....39
13.1. Maintenance Requirements....39
13.2. Annual Full Maintenance Procedures....39
13.3. Operation of Primary System Safety Valve....39
13.4. Primary System Expansion Vessel Charge Pressure....40
13.5. Electrical Checks....40
14. Fault Finding and Servicing....41
14.1. Fault Finding....41
14.2. Codes....41
14.3. System check....41
14.4. Summary Safety Features....42
14.5. Protection Features....43
14.6. Pump Fault Finding....43
Fault signals....44
Manual restart....44
15. Replacement Parts....46
15.1. Draining the Lotus E300 heat unit Primary Circuit....46
15.2. Removing the Primary circulating pump....47

15.3. Removing the Primary System Pressure Relief Valve....47
15.4. Removing the Primary System Expansion Vessel....47
15.5. Removing the Lotus E300 heat unit Main Control PCB....47
15.6. Removing the 2 amp Panel mounted fuses....48
15.7. Removing the Lotus E300 heat unit Status Display PCB....48
15.8. Removing the Plate Heat Exchanger....48
15.9. Removing the Heat exchanger....49
15.10. Removing the De-stratification pump....49
16. User Manual....50
16.1. Winter/ Summer Mode....50
16.2. General Controls....52
16.3. Menus....54
17. Guaranty....56

2. Introduction

Dear Customer,

Thank you for choosing the wall-mounted Lotus E300 heat unit intended to be used as part of the heating system and designed to be the primary source of heating and hot water. We hope that the unit will create an environment in which you will enjoy thermal comfort and all domestic hot water needs.

The Lotus E300 heat unit is the Turkey's first cold plasma powered heat source. It has the same features as a traditional combination boiler without the need for a direct gas / oil fuel source. The heat unit has no requirement for an external flue as there are zero products of combustion generated. The unit also has an inbuilt programmer that allows you to set your heating and hot water times to suit your lifestyle.

Having a high thermal efficiency valueand an A+++ ErP (Energy-related Products) energy rating the Lotus® technology paves the way for zero emission home heating products.

The unit is manufactured with state-of-the-art technology to guarantee reliability, safety and satisfy the specified requirements.

Please carefully read this manual before using the unit and follow its instructions.

Please follow the installation and maintenance basic requirements.

Please observe all the following warnings, recommendations and instructions.

2.1. Important Notes

The Lotus E300 heat unit must be installed in accordance with the manufacturer's instructions and all relevant regulations in force at the time of installation.

This appliance is not intended for use by persons (including children) with reduced physical, sensory or mental capabilities, or lack of knowledge and experience, unless they have been given supervision or instruction concerning the use of the appliance by a person responsible for their safety.

The Lotus E300 heat unit should be installed and maintained by a competent person. Please read and understand these instructions before installing the Lotus E300 heat unit. Following installation and commissioning the operation of the Lotus

E300 heat unit, the central heating system and associated controls should be explained to the customer and these instructions left with the end user for future reference.

The Lotus E300 heat unit must be installed into a sealed (pressurised) primary system. Following installation of the primary system the system should be flushed in accordance with recent regulations and an inhibitor added.

The Lotus E300 heat unit does not contain any substances harmful to health; it does not contain any asbestos. Small quantities of adhesives and sealants used in the manufacture of the product are cured and present no known hazards.

Notes on the Documentation

The following information is intended to help you throughout the entire documentation.

Further documents apply in combination with this installation and maintenance manual.

Lotus® assume no liability for any damage caused by non-observance of these

manuals.

Applicable documents

The following additional documents are provided with the appliance:

For the owner of the system:
Brief user's instructions
Guaranty card

For the qualified technician:

Instructions for installation and servicing.

The manuals for any accessories and controllers used also apply.

Retention of documents

Please pass on this installation manual to the owner of the system. The owner should

retain the manuals so that they are available when required.

Safety instructions and symbols

Please observe the safety instructions in this manual for the installation of the appliance!

Symbols used in the manual are explained below:

Danger! Immediate danger to life and limb!

Caution! Potentially dangerous situation for the product and environment!

Note Useful information and instructions.

Note: This heat unit **must** be installed and serviced by a Lotus® authorised person.

Special Instructions and Building Regulations

This appliance must be fitted in accordance with the following instructions.

- The Local Building Regulations
- The Building Regulations Part L1A, L1B & G3
- The Building Standards, (Scotland-consolidated) Regulations.
- Local water bylaws. British Standards- code of practice
- BS EN 12828 Heating systems in buildings. Design for water-based heating systems.
- BS EN 12831 Heating systems in buildings. Method for calculation of the design heat load
- BS EN 14336 Heating systems in buildings. Installation and commissioning of water based heating systems
- The Electricity at Work Regulations 1989
- Electrical Safety Regulations (1994)
- BS7671 Requirements for electrical installations. IEE Wiring Regulations. Eighteenth edition.
- BS EN 13831 Closed expansion vessels with built-in diaphragm for installation in water
- BS EN 60335-1:2012+AC:2014+A11:2014 Household and similar electrical appliances. Safety. General requirements
- BS EN 50110-1:2003 – handling and operation with electrical installations
- BS EN 55014:2001 – electromagnetic compatibility -conditions for household devices, electrical devices and similar devices
- BS EN 60 335-1+ed.2:2003 – electrical household devices
- BS EN 60 335-1+ed.2 zm.A1:2005 – electrical household devices
- BS EN 61000-3-2 ed.3:2006 – electromagnetic compatibility(EMC) – the limit for the harmonic current emission
- BS EN 61000-3-3:1997 – electromagnetic compatibility (EMC)–Law on the limitation of voltage fluctuations and flickering of the low-voltage partition network
- PED 97/23/EC - Pressure Equipment Directive
- BS 7593:2019 Preparation, commissioning and maintenance of domestic central heating and cooling water systems
- BS 5422:2009 Method for specifying thermal insulating materials for pipes, tanks, vessels, ductwork and equipment operating within the temperature range -40°C to +700°C
- Safety signs and signals. The Health and Safety Regulations 1996
- Boiler Plus Regulations (2018)

C.O.S.H.H. (The Control of Substances Hazardous to Health Regulations 2002)

Materials used in the manufacture of this appliance are nonhazardous and no special precautions are required when fitting or servicing this appliance.

3. Basic Operation of the Lotus E300 heat unit

Mains cold water at 2bar minimum enters the boiler via its dedicated connection port with a 15mm full-bore isolation valve connected onto the ½ inch (BSP) connection thread at the base of the boiler. Mains water supply is only used for the DHW supply via the secondary side of the plate heat exchanger and to facilitate the heating system top up via the fitted filling loop.

The heat unit itself is filled with distilled water and the catalyst, the heat unit is not sealed and has a 1 Litre feed and expansion tank with a 1 bar pressure relieve vent to take any expansion within the heating unit body of the water. The Heat unit is a standalone unit from the mains water connection to the boiler and can be topped up via the expansion tank.

Electricity is then passed through the electrodes within the body of the heating unit by means of mains electrical supply, through the main Lotus E Series electric combi boiler PCB, within this balanced water to be burned on plasma.

The arc between the electrodes ignites the hydrogen creating heat which in-turn heats the balanced water within the unit to a predetermined set point.

Water vapor is reabsorbed by the balanced water and poses no risk within the installation.

The heat unit is set to heat up to 90deg and has an immersed stat to obtain this temperature at the top of the heat unit. If this stat was to fail (open circuit) or go out or parameters the boiler would go into lockout, we have a further overheat stat set at 105deg which if activated droEps the neutral feed to the contactor coil which feeds the electrodes and cuts power to the unit.

Water from the sealed side is then passed through a copper coil within the heat unit, down through the flow and return assembly feeding either the DWH plate heat exchanger or the heating circuit by means of the internal pump. DHW is supplied from the heating unit to all outlets by means of dedicated connection port with a 15mm full-bore isolation valve connected onto the ½ inch (BSP) connection thread at the base of the boiler. The heating flow and return connections are of ¾ inch BSP connection thread at the base of the boiler and connected to the system by means of 22mm full bore connections.

If the heating system pressure is too low the boiler will lock out and display an error code advising low system pressure. If either the DHW or room stat temp sensors go out of range or open circuit, again the boiler goes into lockout. The sealed side of the system (Heating / how water) has a 3bar mechanical pressure reducing valve (PRV) installed to overcome any overpressure issues on the sealed circuit side. The sealed side of the system has a 7 Litre feed and expansion tank with a 2bar pressure relieve vent to take any expansion within the heating system body of the water.

3.1. Storage, Unpacking and Handling of the Lotus E300 heat unit

The Lotus E300 heat unit is delivered in protective expanded polystyrene packaging with reinforced corner posts within a cardboard box. The assembly is shrunk wrapped in heavy duty polythene. The assembly must be stored upright, under cover in dry conditions.

Units must not be stacked. The packaging must be removed prior to installation.

Note the weight of the product (42Kg) and the handling instructions applied to the packaging. If using a handling device, e.g. a sack barrow, to manually move the Lotus E300 heat unit, trucking must be done from the rear to avoid damage to the outer panels.

The Lotus E300 heat unit can be handled by one-person utilising suitable manual handling techniques. Handholds are provided in the top rear panel, in both side panels and underneath the Lotus E300 heat unit assembly to aid lifting. Stooping should be avoided and protective clothing worn when necessary.

The packaging is recyclable and should be disposed of in accordance with environmental guidelines.

3.2. Contents Check List

Within the Lotus E300 heat unit packaging the following components are supplied. Please check that all parts are available before commencing installation.

- Lotus E300 heat unit comprising of Plasma Unit, PCB x2, WILO Para Pump, Grundfos de-stratification pump, plate heat exchanger and pressure relieve valve, expansion tank and 7 litre expansion vessel pressurized to 2 bar.
- Hose connection adaptor for primary system drain valve
- Set of cable entry glands and blanking plugs (3 x 20mm, 1 x 25.4mm)
- Installation manual
- User instructions
- Guaranty card
- Fitting template

4. Technical Data Sheet

Heat Unit & Primary Circuit	
Electrical input (max)	6 – 8 kW @ 230 - 240Vac 50Hz
Electrical supply voltage	230 Vac/400 Vac
Electrical supply frequency	50/60Hz
Peak current intensity	32 A(monophase) , 25amp (triphase)
Absorbed electrical power	6 – 8 kW
Electrical supply rating	32 Amps @ 230Vac
RCD rating	40 Amps. Trip rating 30mA
Internal fuse rating	2.5 Amps
Minimum Permitted Cable Diameter	4 mm
Electrical protection class	IP40
Primary system type	Sealed
Primary system operating pressure minimum	0.2 MPa (2 bar)
Primary system operating pressure	0.2 MPa (2 bar)
Primary system maximum design pressure	0.6 MPa (6 bar)
Primary system pressure relief valve setting	0.3 MPa (3 bar)
Primary system expansion vessel	7 litre pre-charged to 0.2 MPa (2 bar)
Frost Protection	Yes
Frost Protection setting	5°C
Primary flow temperature (radiator model)	Not adjustable and dependant on heat unit temperature
Primary flow temperature underfloor model	N/A
Thermal cut-out	105°C
Automatic bypass valve	None
Primary circulating pump	WILO Para
Automatic air vent	Within pump housing
Temporary filling loop	Built into plate heat exchanger (PAKKENS HB 112)
Pressure reducing valve	None
Check valve	None
Strainer	On cold water incoming
Hydraulic connections	
Heating Flow/ Return	3/4
Domestic Cold Inlet	1/2

Domestic Hot Outlet	1/2
Blow-Off (safety valve connection)	Plastic tube connection
	Thermostat
Electrical connection (Y/N)	Yes, Volt free switch on external stat
Wifi Connection	No
Max Distance from boiler if wired	25 meters
Minimum Permitted Cable Diameter	twin core cable of 0.5 mm^2
Max Distance from boiler if unwired (wifi)	N/A
	Complete unit
Unit Weight (empty)	30 kg
Unit weight (full)	42 kg
Packaged weight	45 kg
packaged dimensions H x W x D (mm)	Unit (unpacked): H x W x D Installation kit: H x W x D

4.1. Mechanical Installation

The room where the boiler will be placed and mounted on the Wall should be under normal environmental conditions.

The boiler should not be installed in bathrooms, washrooms, shower rooms, wet floors, or places where there is a possibility of excessive heat or freezing.

Regarding protection and safety; it is referred to minimum distances from flammable objects. Observe these distances during installation.

We recommend keeping these distances wider for ease of service and replacement:

- 500 mm from the front

- 600 mm from above

-

2

0

0

m
m

f
r
o
m

t
h
e

s
i
d
e
s

W
a
l
l

m
o
u
n
t
i
n
g

o

f

t
h
e

b
o
i
l
e
r

Installation is carried out with 2 screws or hooks to hang the boiler with 2 inlets and the distance between the holes in the body of the boiler is 282 mm.

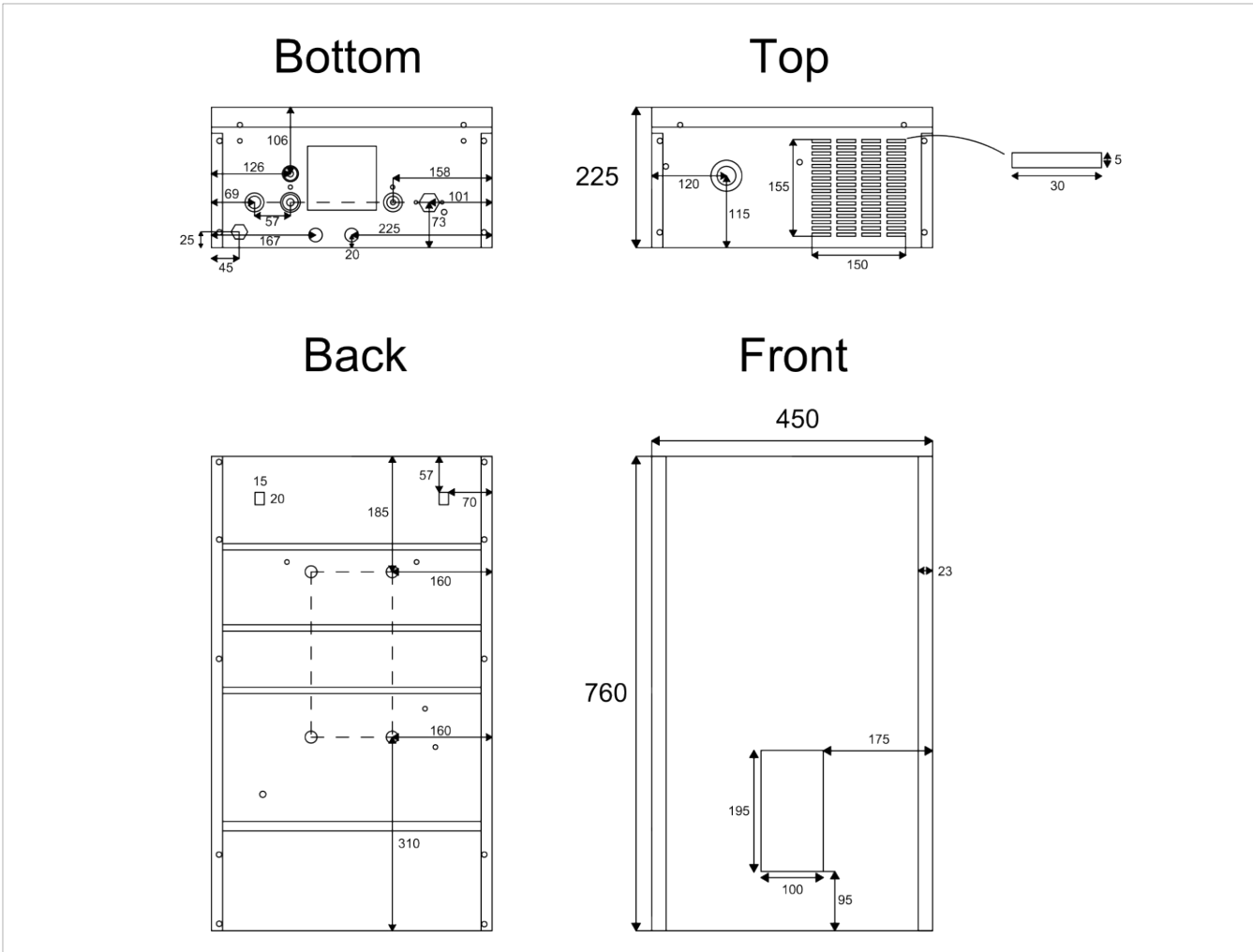

Fig 1: Mechanical Dimensions

Thoroughly cleanse the heating system before connecting the appliance!
By doing this, residue such as flux, solder and detritus is removed from the pipes. Failure to flush and cleanse the system will invalidate the warranty.

The first meter of pipework and fittings from the unit to the system pipework must be in plastic

The appliance is fitted with an expansion vessel. Before assembling the appliance check if the volume of the vessel is adequate. If not, an extra expansion vessel must be installed.

Connect the drain and hose from the pressure relief valve into the top of a tundish and use a 1$^{1/4}$" (one and a quarter inch) PVC pipe to connect to the premises drains.

Sub Connection Outputs (below):

1.1. Heating Return (Pipe Diameter ¾)
1.2. Cold Water Inlet (Pipe Diameter ½)
1.3. Cold Water Outlet (Pipe Diameter ½)
1.4. Heating Outlet (Pipe Diameter ¾)

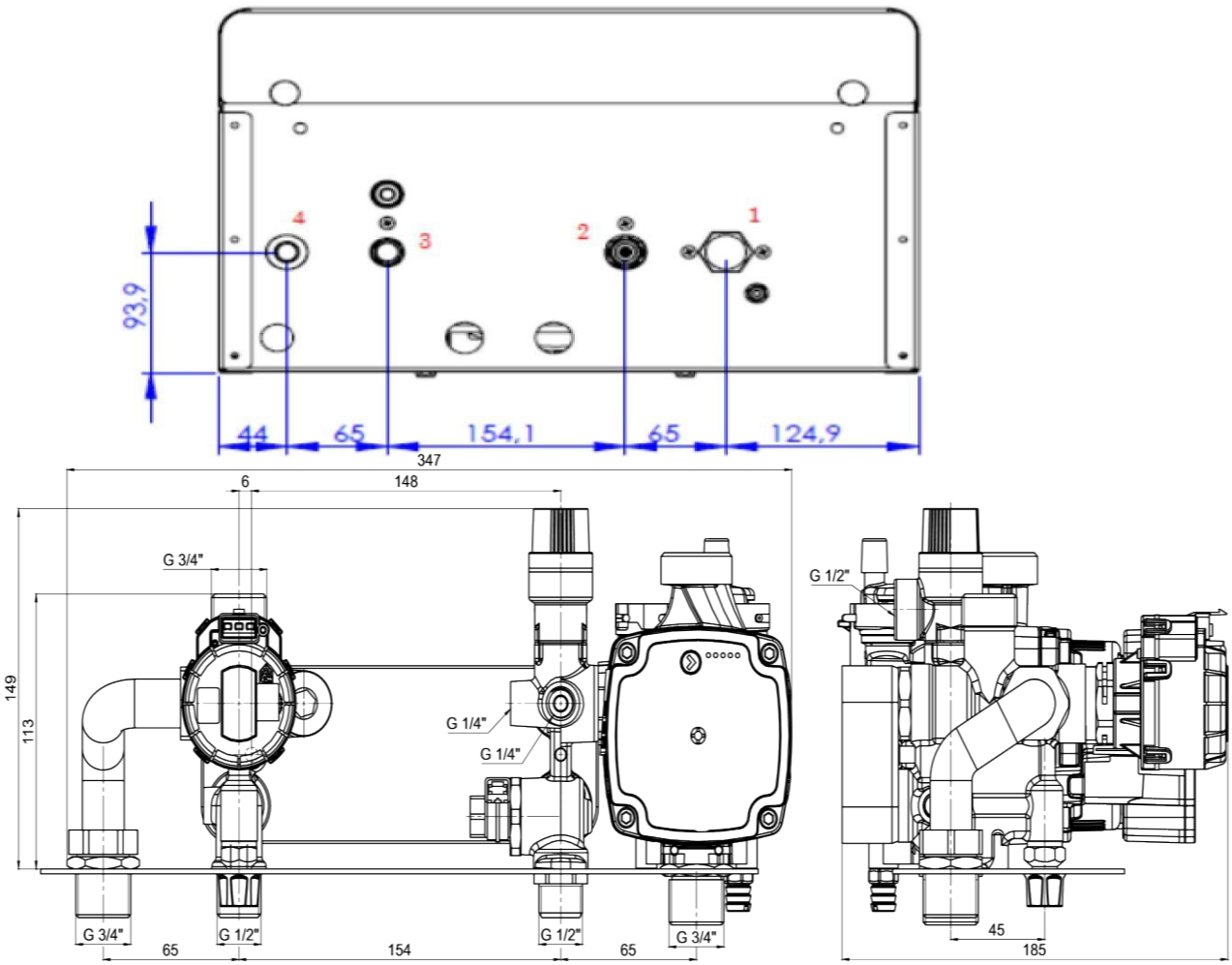

Fig 2. Pipe connections

Pipe Connections

Fig 2. Pipe connections

Below Fig 3. is a simple flow diagram of the heating and hot water system identifying key areas of the Lotus E300 heat unit.

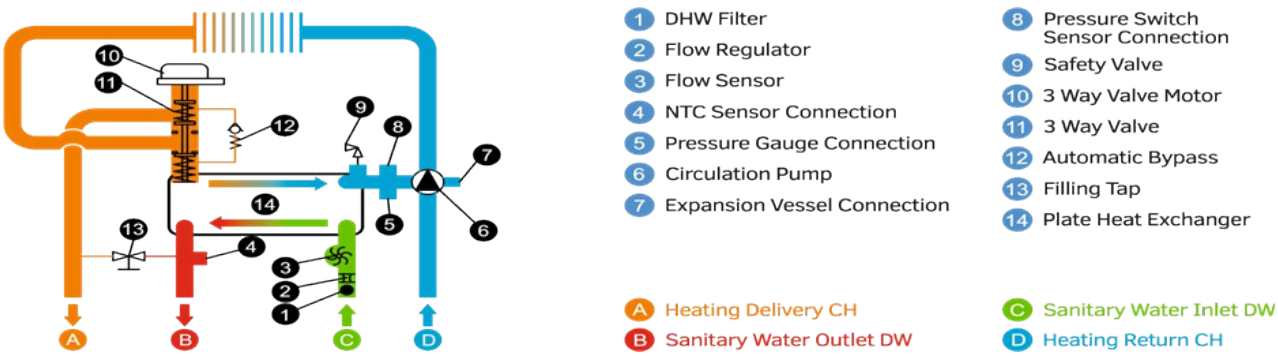

Fig 3. Simple Flow Diagram of Hydraulic system

The following applications are mandatory;

Before assembling the boiler; The appropriate fuse, residual current protection relay and the cable (at the values specified in the technical table below) must be installed inside / outside the installation.

It is mandatory to connect the boiler to the individual grounding line.

If this is not done, the device will not be commissioned by Lotus authorized service, the device will be out of warranty and Lotus shall not be liable for any possible damages / problems.

Recommended fuse size and cable diameters

- 1x230V + N + PE 3x4 mm² (min.)/3X230V +N+PE 5X2.5 mm² (min.)
- Household Auto Fuse, 32 A

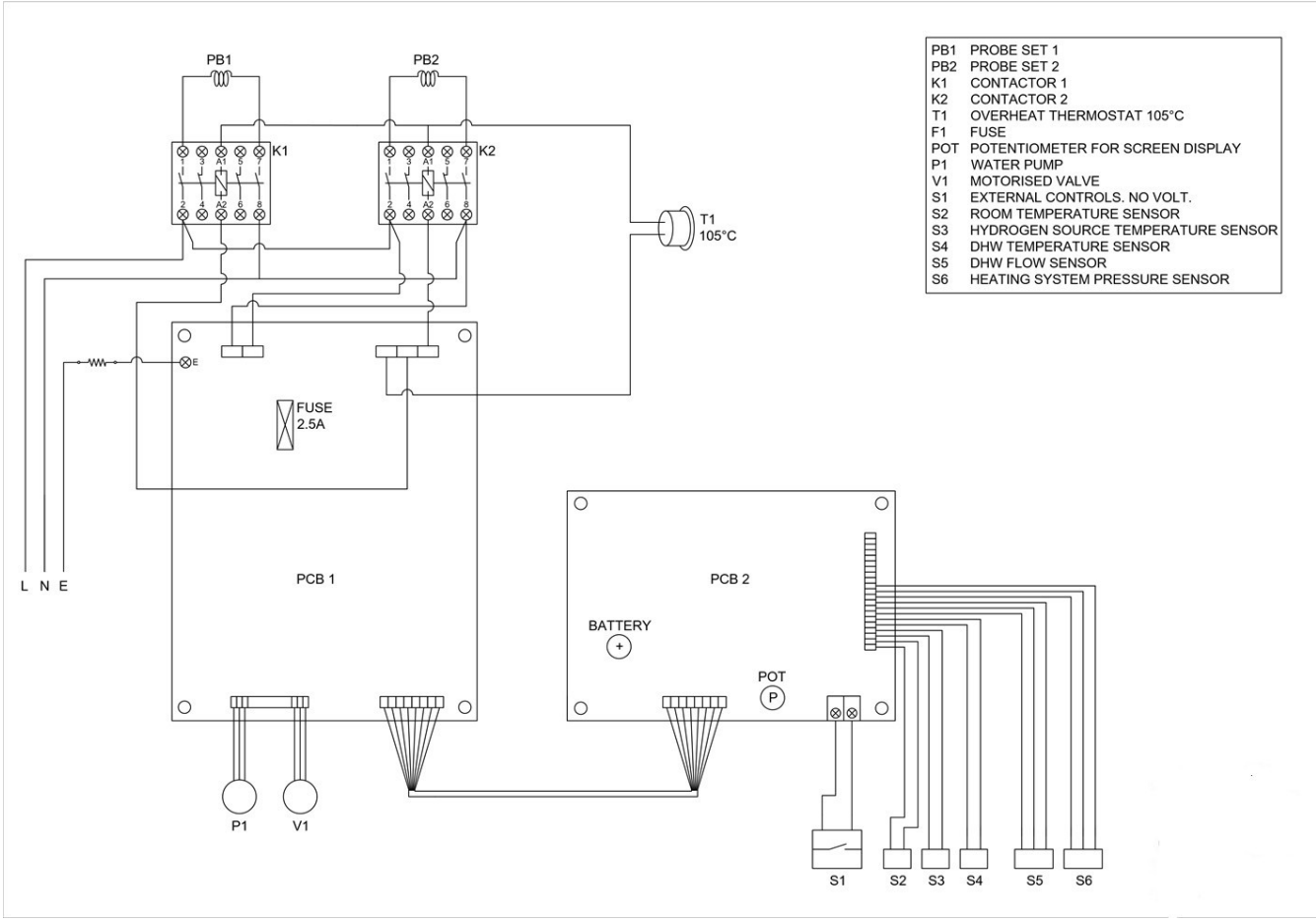

Fig 4. Electrical Connection Diagram

1.5. Genera l Requirements

5.1. Location of the Lotus E300 heat unit

The location chosen for the heat unit must provide adequate space for servicing and air circulation around the heat unit.

The Heat Unit may be installed in any room except:

- Bathrooms
- Washrooms
- Shower Rooms
- Wet Rooms
- Or places where there is a possibility of excessive heat or freezing and condensation.
- The Lotus E300 heat unit must not be sited outside or in any location where it could be exposed to the weather.
- It must be installed in a dry and ideally a frost-free environment.

Particular attention is drawn to the requirements of BS 7671 (IEE Regulations), the Electrical Provisions of the Building Standards (Scotland) Regulations, and in IE the current edition of IS 813 and the current ETCI rules.

The Lotus E300 heat unit must be vertically mounted on a flat, level surface capable of supporting the “full” weight of the unit. When full the unit weighs a total of 42 kg.

The location chosen must allow the discharge pipe from the safety valves to be correctly installed. Domestic hot water pipe runs should be kept as short as possible for maximum economy. Sufficient access must be allowed around the unit to allow removal of the front and top & bottom panels for servicing and maintenance of the system.

An installation template is supplied with the unit to aid in location and layout of pipework connections.

5.2. Water Supply to the Lotus E300 heat unit

Bear in mind that the mains water supply to the property will be supplying both the hot and cold water requirements simultaneously. It is recommended that the maximum water demand be assessed and the water supply be checked to ensure this demand can be satisfactorily met.

Wherever possible the mains water supply pipe should be in 22mm OD (copper) or 25mm OD (Blue MDPE). The minimum mains water supply requirements should be 1.0 bar and 20 litres per minute flowrate. At these values outlet flowrates may be poor if several outlets are used simultaneously, the higher the available pressure and flowrate the better the system performance will be.

In some areas of the UK the water supply may have a high level of natural hardness. Whilst this is not detrimental to the quality of the water, in water heating systems the calcium carbonate which causes the water’s “hardness” can precipitate onto hot surfaces and in time adversely affect hot water performance. If the temporary hardness of the cold water mains supply exceeds 200mg/l (check with your water supply company) it is recommended that

some form of water treatment is considered. Any device selected must be suitable for use and not unduly affect the flow rate capacity to the Lotus E300 heat unit, consult the manufacturer of the device for details.

For optimum performance after installation the Lotus E300 heat unit must be flushed in accordance with the guidelines given in BS 7593:1992 “Treatment of water in domestic hot water central heating systems”. This must involve the use of a proprietary cleanser, such as GE Betz Sentinel X300 or X400, Fernox “Superfloc” or Salamander system cleanser. Follow the manufacturer’s instructions to ensure correct cleansing of the system.

For long term protection against corrosion and scale, after flushing, the system should be dosed with an inhibitor such as GE Betz Sentinel X100, Fernox MB-1 or Copal or Salamander System Inhibitor in accordance with the guidelines given in BS 7593.

5.3. Pipework & Fittings

NOTE: All pipework, fittings and terminal fittings must be compatible with unvented systems and have a rated operating pressure of at least 6 bar. Where plastic pipe / fittings are being used the rated pressure must be achievable at outlet temperatures that can be expected within the hot water distribution pipework. If in doubt, consult the manufacturer of the fittings selected.

5.4. Treatment of the Primary (Central Heating) Circulating System

The primary circuit must be flushed in accordance to BS 7593 during commissioning or replacement of a heating unit.

Primary water circulating systems will be subject to corrosion unless an appropriate water treatment is applied. Without treatment the efficiency of the system will be reduced over time as corrosion sludge accumulates within the system, risking damage to the pump and valves, system noise and circulation problems.

We recommend inhibitor levels are checked on an annual basis (usually during the service) or sooner if the system content is lost. This should be carried out using a Fernox inhibitor Test Kit.

5.5. Sealed Primary Systems

The Supply to the Lotus E300 heat unit must be installed in a sealed primary system. All necessary primary system controls are supplied fitted to the Lotus E300 heat unit. The sealed system expansion vessel fitted has a capacity of 7 litres. If in doubt the total primary system volume must be calculated to determine if additional expansion volume is required.

The Lotus E300 heat unit initial primary system cold fill pressure is 2.0 bar.

The Lotus E300 heat unit incorporates an automatic air vent at its highest point (fitted to the pump housing). If any primary pipework is routed above the level of the Lotus E300 heat unit additional air vents must be fitted to the highest points of the flow and return pipes and at any point where air is likely to collect.

1.6. Installation – General

6.1. Positioning the Lotus E300 heat unit

Decide where the Lotus E300 heat unit is to be installed. Reference must be made to the dimensions of the unit and the minimum access space requirements. For maintenance the boiler should be installed with a minimum distance of: 100mm between the sides of the heat unit and the wall, 600mm between the top of the heat unit and the ceiling, 500mm from the front.

Consideration must also be taken of the routing of the pipework to the unit and provision of the discharge pipe. Pipework is connected from below the unit. A template is provided to aid in positioning the unit and determining the pipework entry locations.

The heat unit is designed for home use. It should not be used for industrial or commercial use where continuous hot water is required.

Flammable materials shall not be stored near the heat unit.

6.2. Removal of Panels

Note: For installation and commissioning the front cover must be removed.

Note: Electrical Supplies must be isolated prior to removing any panels.

The front panel is secured by two spring screws underneath the boiler and is removed by undoing the screws, pulling forward using the fingers and lifting out of position.

Side panels can also be removed and is secured by four nuts and bolts on either side, they are secured to the back plate. To remove undo nuts and slide the panels outwards.

The Bottom can be removed and is secured by four nuts and washers. To remove, unscrew the four securing nuts on the bottom panel and then pull downwards from the front edge.

6.3. Cable Entry Positions

The electrical supply cables are to be routed to enter the unit from the rear center of the bottom plate side. The cable glands should be fitted into the cable entry hole and secured in place using the lock nuts.

A cable gland must be used to secure the electrical supply cables when fitted. Failure to do so can result in the cables straining internal electrical connections and possible electrical failure as a result. Failure due to inadequate cable securing will not be covered by the guaranty.

The unit is fitted with a 1 meter extendable room temperature sensor and built in time clock for operation. An additional connection on the Control PCB is provided for a fixed wire room temperature sensor (not provided).

Select operating time interval by means of the arrow keys and confirm by pressing the enter key (center of arrow keys) the corresponding square will turn black and saved to memory. To deselect again just highlight again by means of the arrow key and select it again by pressing the enter key (center of arrow keys), this will clear the selection. Continue these steps to set all times and dates of operation.

There are 3 x 3hour operating time intervals, a 6-hour time interval and a 9-hour time interval for all day operation.

Please note, by altering the room set point the time clock is bypassed until the next interval and/or temperature sensor is satisfied. If not the time clock and runs to maintain set point.

Auto Program Tab

Main Menu	Oper. Inf.	Auto Prog.	Fault Det.	Settings

Time Zone	Mon	Tue	Wed	Thu	Fri	Sat	Sun
00-06							
06-09							
09-18							
18-21							
21-24							

Installation – Plumbing

6.4. Pipe Fittings

Pipe connections to the Lotus E300 heat unit must be made using compression type fittings. Solder connections directly to the unit must not be made as the heat may damage the insulation materials used. Damage caused by heat applied to solder fittings in close proximity to the unit will not be covered by the warranty. Solder connections may be used elsewhere in the system away from the Lotus E300 heat unit. Use water soluble flux for making soldered joints and ensure any flux residue is removed following installation.

6.5. Outlet Pipework

The pipework from the Lotus E300 heat unit to the hot outlet fittings should be in 22mm pipe with short runs of 15mm pipe to showers and basins. Small bore pipe can be used to suit some taps but runs should be kept as short as possible. Pipe sizes may vary due to system design.

6.6. DHW Outlets

It is recommended that all outlets connected to the system should be of blended type due to the temperatures supplied by the heating unit.

6.7. Discharge Pipework

It is a requirement of Building Regulation G3 that any discharge from an unvented system is conveyed to where it is visible but will not cause danger to persons in or about the building. The tundish and discharge pipes should be fitted in accordance with the requirements and guidance notes of Building Regulation G3. The G3 Requirements and Guidance section 3.50 - 3.63 are reproduced in the following sections of this manual. For discharge pipe arrangements not covered by G3 Guidance advice should be sought from your local Building Control Officer. Any discharge pipe connected to the pressure relief devices (expansion valve and temperature/pressure relief valve) must be installed in a continuously downward direction and in a frost-free environment.

Water may drip from the discharge pipe of the pressure relief device. This pipe must be left open to the atmosphere. The pressure relief device is to be operated regularly to remove lime deposits and to verify that it is not blocked.

G3 REQUIREMENT

"...there shall be precautions...to ensure that the hot water discharged from safety devices is safely conveyed to where it is visible but will not cause danger to persons in or about the building."

Notes:

Discharge pipe-work D2 can now be a plastic pipe but only pipes that have been tested to a minimum 110°C must be used.

Discharge pipe D2 can now be plumbed into the soil stack but only soil stacks that can handle temperatures of 99°C or greater should be used.

The following extract is taken from the latest G3 Regulations;

Discharge pipe D1

3.50 Safety devices such as temperature relief valves or combined temperature and pressure and pressure relief valves (see paragraphs 3.13 or 3.18) should discharge either directly or by way of a manifold via a short length of metal pipe (D1) to a tundish.

3.51 The diameter of discharge pipe (D1) should be not less than the nominal outlet size of the temperature relief valve.

3.52 Where a manifold is used it should be sized to accept and discharge the total discharge form the discharge pipes connected to it.

3.53 Where valves other than the temperature and pressure relief valve from a single unvented hot water system discharge by way of the same manifold that is used by the safety devices, the manifold should be factory fitted as part of the hot water storage system unit or package.

Tundish - Fitted to Lotus E300 heat unit

3.54 The tundish should be vertical, located in the same space as the unvented hot water storage system and be fitted as close as possible to, and lower than, the valve, with no more than 600mm of pipe between the valve outlet and the tundish (diagram 11 & Table 1, page 20).

Note: To comply with the Water Supply (Water Fittings) Regulations, the tundish should incorporate a suitable air gap.

The tundish must be installed away from electrical devices

3.55 Any discharge should be visible at the tundish. In addition, where discharges from safety devices may not be apparent, e.g. in dwellings occupied by people with impaired vision or mobility, consideration should be given to the installation of a suitable safety device to warn when discharge takes place, e.g. electronically operated.

Discharge pipe D2 (not supplied)

3.56 The discharge pipe (D2) from the tundish should:

(56.a) have a vertical section of pipe at least 300mm long below the tundish before any elbows or bends in the pipework (see diagram 11, page 20); and

(56.b) be installed with a continuous fall thereafter of at least 1 in 200.

3.57 The discharge pipe (D2) should be made of:

(57.a) metal; or

(57.b) other material that has been demonstrated to be capable of safely withstanding temperatures of the water discharged and is clearly and permanently marked to

identify the product and performance standard (e.g. as specified in the relevant part of BS 7291).

3.58 The discharge pipe (D2) should be at least one pipe size larger than the nominal outlet size of the safety device unless its total equivalent hydraulic resistance exceeds that of a straight pipe 9m long, i.e. for discharge pipes between 9m and 18m the equivalent resistance length should be at least two sizes larger than the nominal outlet size of the safety device; between 18 and 27m at least 3 sizes larger, and so on; bends must be taken into account in calculating the flow resistance. (See diagram 11, Table 1, G3), (diagram 11 & Table 1, page 20 in these instructions) and the worked example.

Note: An alternative approach for sizing discharge pipes would be to follow Annex D, section D.2 of BS 6700 Specification for design, installation, testing and maintenance of services supplying water for domestic use within buildings and their curtilages.

3.59 Where a single common discharge pipe serves more than one system, it should be at least one pipe size larger than the largest individual discharge pipe (D2) to be connected.

3.60 The discharge pipe should not be connected to a soil discharge stack unless it can be demonstrated that that the soil discharge stack is capable of safely withstanding temperatures of the water discharged, in which case, it should:

(60.a) contain a mechanical seal, not incorporating a water trap, which allows water into the branch pipe without allowing foul air from the drain to be ventilated through the tundish;

(60.b) be a separate branch pipe with no sanitary appliances connected to it;

(60.c) if plastic pipes are used as branch pipes carrying discharge from a safety device, they should be either polybutalene (PB) to Class S of BS 7291-2 or cross-linked polyethylene (PE-X) to Class S of BS 7291-3:2006; and

(60.d) be continuously marked with a warning that no sanitary appliances should be connected to the pipe.

Note:

1. Plastic pipes should be joined and assembled with fittings appropriate to the circumstances in which they are used as set out in BS EN ISO 1043-1.
2. Where pipes cannot be connected to the stack it may be possible to route a dedicated pipe alongside or in close proximity to the discharge stack.

Termination of discharge pipe

3.61 The discharge pipe (D2) from the tundish should terminate in a safe place where there is no risk to persons in the vicinity of the discharge.

3.62 Examples of acceptable discharge arrangements are:

(62.a) to a trapped gully with the end of the pipe below a fixed grating and above the water seal;

(62.b) downward discharges at low level; i.e. up to 100mm above external surfaces such as car parks, hard standings, grassed areas etc. are acceptable providing that a wire cage or similar guard is positioned to prevent contact, whilst maintaining visibility; and

(62.c) discharges at high level: e.g. into a metal hopper and metal downpipe with the end of the discharge pipe clearly visible or onto a roof capable of withstanding high temperature discharges of water and 3m from any plastic guttering system that would collect such discharges.

3.63 The discharge would consist of high temperature water and steam. Asphalt, roofing felt and non-metallic rainwater goods may be damaged by such discharges.

Worked example of discharge pipe sizing

Diagram 1: shows a G1/2 temperature relief valve with a discharge pipe (D2) having 4 No. elbows and length of 7m from the tundish to the point of discharge.

From Table 1:

Maximum resistance allowed for a straight length of 22mm copper discharge pipe (D2) from a G1/2 temperature relief valve is 9.0m.

Subtract the resistance for 4 No. 22mm elbows at 0.8m each =

3.2m Therefore, the permitted length equates to: 5.8m

5.8m is less than the actual length of 7m therefore calculate the next largest size.

Maximum resistance allowed for a straight length of 28mm pipe (D2) from a G1/2 temperature relief valves equates to 18m. Subtract the resistance of 4 No. 28mm elbows at 1.0m each = 4.0m

Therefore, the maximum permitted length equates to: 14m

As the actual length is 7m, a 28mm (D2) copper pipe will be satisfactory.

WARNINGS:

- Under no circumstances should the factory fitted temperature/pressure relief valve be removed other than by a competent person. To do so will invalidate any guarantee or claim.
- The cold-water combination valve assembly must be fitted on the Lotus E300 heat unit water supply to the Lotus E300 heat unit.
- No control or safety valves should be tampered with or used for any other purpose.
- The discharge pipe should not be blocked or used for any other purpose.

			OF STRAIGHT PIPE	0.8M
G 1/2	15mm	22mm	UP TO 9M	1.0M
		28mm	UP TO 18M	1.4M
		35mm	UP TO 27M	1.0M
G 3/4	22mm	28mm	UP TO 9M	1.4M
		35mm	UP TO 18M	1.7M
		42mm	UP TO 27M	1.4M
G1	28mm	35mm	UP TO 9M	1.7M
		42mm	UP TO 18M	2.3M
		54mm	UP TO 27M	

Table 1. Sizing of Copper Discharge Pipes (D2) for Common T&P Relief Valve Sizes

NOTE: The above table is based on copper tube. Plastic pipes may be of different bore and resistance. Sizes and maximum lengths of plastic should be calculated using data prepared for the type of pipe

being used.

Diagram 1. The above diagram is of a typical discharge pipe arrangement. (Extract from Building Regulation G3)

6.8. Primary (Central Heating) Pipework

Connections to the Lotus E300 heat unit primary flow and return must be in 22mm o/dia. pipe. Isolating valves are fitted to the Lotus E300 heat on the primary flow and return connections to enable the Lotus E300 heat unit to be isolated from the primary circuit for maintenance and servicing. Connections to the isolating valves are 22mm compression.

Conventional radiator based central heating design conside

rations should be made in selecting the radiators and circulating pipework sizes. The maximum output from the Lotus E300 heat is 7.6kW, ensure the radiator or load does not exceed this. NOTE: The Lotus E300

Use water soluble flux for making soldered joints and ensure any flux residue is removed following installation.

A filling loop is provided within the Lotus E300 heat unit to fill the primary circuit directly from the cold-water supply.

Installation – Electrical

6.9. Important Notes

All wiring must be carried out in accordance with the current IEE Wiring Regulations.

Electrocution caused by touching live parts can be fatal.

NOTE: Exposed metal components within the case of the unit carry an electrical current, if any covers are removed or works undertaken the electrical supply must be isolated.

Before working on the appliance, TURN OFF the power supply and secure against restart.

The Lotus E300 heat Unit electrical installation must be carried out by a competent person in accordance with any relevant regulations in force at the time of installation and the requirements of these instructions to ensure correct operation.

The main incoming electrical supply to the property must be of sufficient current rating and voltage for the Lotus E300 heat and any other electrical requirements for the property.

A 230 V, ~ 50 Hz single phase / 400 Vac triphase electricity supply fused to 40 Amp must be provided.

The consumer unit must be fitted with a double pole RCD or RCBO with a trip sensitivity of 300mA capable of breaking the full load current to BS EN 61008.

The appliance must be earthed.

All pipe work must be cross bonded

6.10. Boiler Connection

The Lotus E300 heat Unit has a rated maximum output of 7.2kW at 240V ~. The supply cable must therefore be separate and dedicated to the heat unit. The supply cable should be a minimum of 10mm^2 cross sectional area, (check the IEE Wiring Regulations for correct cable sizing). It must be routed into the Lotus E300 heat Unit via the 25mm cable gland previously fitted.

The cable should be wired as set out below,

GREEN/YELLOW (EARTH) WIRE	Heat Unit Earth Terminal
BLUE (NEUTRAL) WIRE	Heat Unit Terminal N
BROWN (LIVE) WIRE	Heat Unit Terminal L

6.11. Programmable Room Thermostat (not supplied)

1.6.11.a) Connect the room thermostat with a twin core cable of minimum Cu 0.5 mm2 of recommended diameter and 25 meter length.

1.6.11.b) The wiring for the thermostat must be run separately from the mains supply, minimum separation is 10mm.

1.6.11.c) The room thermostat must be located away from the sun, radiators, electrical devices and/or other heat generators and approx. 1.5 m in height from the floor on an interior wall. (see Diagram 2, below)

1.6.11.d) External controls can be connected to terminals marked “CN_ROOM”, no voltage is to be applied to these terminals.

Diagram 2. Correct thermostat positioning

1.7. Pre Commissioning

7.1. Preliminary Electrical Checks

1.7.1.a) Check the electrical installation by carrying out short circuit, earth continuity and resistance to earth tests and a check for correct polarity.

1.7.1.b) Check all electrical connections are tight. Loose connections can cause over-heating of terminals and the possibility of a fire.

1.7.1.c) Check all earth bonding links are connected, are tight and un-damaged. 10.

10.1. Check Operation of the Lotus E300 heat unit

Starting up of the boiler is only carried out by Lotus authorised service personnel.

Starting up of the boiler should only be carried out by authorized professional companies or service personnel who have a valid agreement with the manufacturer. The Authorized Service List is as attached.

The company or the person starting up the boiler has an obligation to repair any defects or defects during the warranty period. If this company no longer operates, the warranty repair will be performed by your nearest authorised service agent listed on the list.

The commissioner has taken over the following obligations:

- check the connection of the boiler to the electricity grid and the heating system
- check the sealing of the boiler
- control all functions of the boiler
- informing the user of the operation, control and maintenance of the boiler
- informing the user of the distance of the boiler to flammable materials, fire protection and safety gaps to be left from the walls

To meet the requirements for safe and economic operation of the boiler, the following conditions must be met:

- The electrical network must be suitable for installation.
- Assessment of connection of the heating system and the electric boiler requirements
- The boiler must only be installed in a suitable environment for the intended use and Project
- Modification, operation, use, control and maintenance of the boiler is prohibited unless it complies with the rules and directives of this manual.

Removing of safety devices or components in the boiler is particularly prohibited.

11. Commissioning

<u>Commissioning of the heat unit must only be carried out by a Lotus® approved installer.</u>

11.1. Filling the Lotus E300 heat unit

Cold Water Supply (Via an anti-Calc Filter)

Open all domestic hot water taps supplied by the boiler, turn on the mains water supply to the boiler and open the mains water isolating valve below the heat unit. Water will now flow through the heat unit to the hot taps. Starting with the lowest tap supplied, turn the hot taps off one at a time until the hot water pipework is purged of air. Check all hot and cold-water pipework for leaks.

Fill the heating system as follows:

1.a) Set the expansion vessel pressure to the system design pressure. (1.6 – 2.0bar).
1.b) Flush out the heating system ensuring it is clean before connecting to the heat unit. In accordance to BS 7953.
1.c) Check if both isolation valves on the heat unit are open.
1.d) Fill the heat unit heating circuit from the filling loop, check that the auto air vent on top of the pump is open, bleed all radiators etc.
1.e) Fill the heating system to the system design pressure (1.6 – 2.0bar).

Note: The water in the expansion tank has a current running through it, do not touch the water unless the electrical supply is isolated.

1.f) Add 2 grams of the catalyst to 1 litre of distilled water and pour into the expansion tank.
1.g) Fill the heat unit with distilled water, by means of the feed and expansion tank at the top right of the unit. Approximately 10litre total required.
1.h) The clear tube at the side of the cell can be used as a sight glass, fill to the top of the cell, leaving room for expansion.
1.i) Turn on the electrical supply, the circulation pump will run for 8 minutes to clear any air from the system.
1.j) Check that the probe sets are being called for and have an electrical supply to them, measure the amps to the unit, it should be 25 to 32 amps, if current is low, add more catalyst mixture until the current is correct. If current (Amps) is too high drain some water out and add fresh water until the current drawn is correct. When finished, top up the catalyst expansion tank to the fill line indicated on the label.
1.k) Check for correct flow and temperature of hot water to the radiators
1.l) Check all connections and the entire system for leaks.
1.m) Open a hot tap and check for correct water flow and temperature
1.n) Make sure that there is a heating demand.
1.o) Inform the user of the operation, control and maintenance of the boiler
1.p) Inform the user of the distance from the boiler of flammable materials and safety gaps to be around the boiler.

11.2. Filling the Sealed System Primary Circuit

2.a) The primary system must be flushed in accordance with BS 7593 and the manufacturer's instructions supplied with the flushing agent selected. (points i – p, below)
2.b) Connect the primary filling loop and tighten connections (see diagram ??,).
2.c) Check all radiator valves are in the open position.
2.d) Open the filling loop isolating valves and allow primary system to fill until the pressure gauge on the fascia of the Lotus E300 heat unit reads approx. 2.0 bar.
2.e) Purge air from all radiators and air vent points in the primary system.
2.f) Check the primary system pressure. This should be between 1.0 and 1.5 bar. If lower, open filling loop isolating valves until gauge reads approx. 2.0 bar. Repeat air purging operation. This sequence may need to be repeated several times to ensure all air is purged from the system.
2.g) Check primary system for leaks and rectify as necessary.
2.h) When the pressure gauge remains steady at between 1.0 and 1.5 bar ensure both filling loop isolating valves are closed and remove filling loop flexible hose from the primary system connection point.

System protection: Failure to protect the system will invalidate the manufacturer's warranty.

2.i) Fill the system with cold mains water to the recommended pressure 1.5 bar and check for leaks, then drain the system thoroughly making sure all drain cocks are fully open and that the system is completely drained.
2.j) Add Fernox F3 cleaner to the system at the furthest point from the boiler, this is to allow the substance to fully dilute throughout the system. If you are unsure of the correct dose rate, contact Fernox on 03301007750 for advice.
2.k) Re-fill the system and circulate the F3 cleaner prior to the boiler being fired up. Commission the system in the normal way. The cleansing agent must be in the system for a minimum 1 hour with the system running at normal operating temperature. A longer period of time would be more beneficial to the cleansing process especially if excess flux was used or is an old system. F3 cleaner can be left in the system for up to a maximum of one week running on a normal heating cycle. (We recommend that existing systems are power flushed as per BS 7593 and PAS33 regulations)
2.l) Drain and flush the system thoroughly to remove the cleaning agent and any debris or contaminants. This is a critical part of the cleaning process and must be carried out correctly. Use a rinse test meter (TDS), such as the Fernox CTM. The reading must be within 10% of the mains ppm value.
2.m) After the system has been thoroughly flushed and TDS readings are within 10% you can now add Fernox F1. This will protect against the formation of scale, corrosion and microbiological growths. It is crucial however, that for the protector to work correctly, the system must be properly cleansed and flushed.
2.n) Now attach the label included within the Fernox F1 packaging completed and attached adjacent to the boiler. We recommend inhibitor levels are checked on an annual basis (usually during the service) or sooner if the system content is lost. This should be carried out using a Fernox inhibitor Test Kit. Fernox Technical Service Helpline on 0870 870 0362 for further assistance.
2.o) We recommend inhibitor levels are checked on an annual basis (usually during the service) or sooner if the system content is lost.

2.p) This should be carried out using a Fernox inhibitor Test Kit. Fernox Technical Service Help line on 0870 870 0362 for further assistance

11.3. Set the Programmable PCB Thermostat

Select operating time interval by means of the arrow keys and confirm by pressing the enter key (center of arrow keys) the corresponding square will turn black and saved to memory. To deselect again just highlight again by means of the arrow key and select it again by pressing the enter key (center of arrow keys), this will clear the selection. Continue these steps to set all times and dates of operation.

There are 3 x 3hour operating time intervals a 6 hour time interval and a 9 hour time interval for all day operation.

Please note, by altering the room set point the time clock is bypassed until the next interval and/or temperature sensor is satisfied. If not the time clock and runs to maintain set point.

Auto Program Tab

Main Menu	Oper. Inf.	Auto Prog.	Fault Det.	Settings

Time Zone	Mon	Tue	Wed	Thu	Fri	Sat	Sun
00-06							
06-09							
09-18							
18-21							
21-24							

11.4. Demonstration to User

Following commissioning any panels or covers removed must be replaced and fully secured in place. The system, its function and control should be fully explained to the user. This must include:

4.a) DHW supply – Explain how the complete Lotus E300 heat unit is only heated.

4.b) Central Heating – Explain how the central heating system works. Explain the operation of the programmable PCB thermostat and the settings that have been programmed. Explain how the programmable PCB thermostat can be over-ridden if required.

4.c) System malfunction – Explain what to do if the system malfunctions or the “alarm” indicators are illuminated.

4.d) System maintenance – Explain the necessity for the system to receive regular maintenance to ensure its continued safe and efficient operation.

4.e) User Instructions – Hand over the Lotus E300 heat unit Installation Instructions and User Instructions.

12. WILO KSL/7-50/SC Para Pump

12.1. Starting the pump

1.a) Before startup

Do not start the pump until the system has been filled with liquid and vented. Make sure that the required minimum inlet pressure is available at the pump inlet. (0.5 Bar) When using the pump for the first time, the system must be vented. See section (b) Venting the pump.

1.b) Venting the Pump

Small air pockets trapped inside the pump may cause noise when starting up the pump. The pump venting function is activated by pressing and holding the operating button (for 3 seconds) and automatically vents the pump. However, this function does not vent the heating system

When you have vented the pump, that is when the noise has ceased, set the pump according to the recommendations.

12.2. Operating panel

Indicator lights (LEDs)

12.3. Alarm or warning

If the pump has detected one or more alarms or warnings, the LED lights up/flashes in case of a fault. When the fault has been resolved the operating panel switches back to operating status.

12.4. Control modes

Variable differential pressure Δp-v (I, II, III)	Recommended for two-pipe heating systems with radiators to reduce the flow noise at thermostatic valves. The pump reduces the delivery head to half in the case of decreasing volume flow in the pipe network. Electrical energy saving by adjusting the delivery head to the volume flow requirement and lower flow rates. There are three pre-defined pump curves (I, II, III) to choose from.
Constant differential pressure Δp-c (I, II, III)	Recommended for underfloor heating for large-sized pipes or all applications without a variable pipe network curve (e.g. storage charge pumps), as well as single-pipe heating systems with radiators. The control keeps the set delivery head constant irrespective of the pumped volume flow. There are three pre-defined pump curves (I, II, III) to choose from.
Constant speed (I, II, III)	Recommended for systems with fixed system resistance requiring a constant volume flow. The pump runs in three prescribed fixed speed stages (I, II, III). **Note: Factory Setting: Constant speed, pump curve III**

External control via iPWM signal & iPWM 1 mode

The required setpoint/actual value comparison for control is performed by an external controller.
A PWM signal (pulse-width modulation) is fed as a correcting variable to the pump. The PWM signal generator gives the pump a periodic sequence of impulses (the duty cycle) in accordance with DIN IEC 60469-1.

iPWM 1 mode (heating application):

In iPWM 1 mode, the pump speed is controlled according to the PWM input signal.

Behaviour in the event of a cable break:

If the signal cable is disconnected from the pump, e.g. due to a cable break, the pump accelerates to maximum speed.

PWM signal input [%]

- < 5: Pump runs at maximum speed
- 5-85: The speed of the pump decreases linearly from nmax to nmin
- 85-93: Pump runs at minimum speed (operation)
- 85-88: Pump runs at minimum speed (starting)
- 93-100: Pump stops (standby)

iPWM 2 mode

In iPWM 2 mode, the pump speed is controlled according to the PWM input signal.

Behaviour in the event of a cable break:

If the signal cable is disconnected from the pump, e.g. due to a cable break, the pump stops.
PWM signal input [%]

- 0-7: Pump stops (standby)
- 7-15: Pump runs at minimum speed (operation)
- 12-15: Pump runs at minimum speed (starting)
- 15-95: The speed of the pump increases linearly from nmin to nmax
- > 95: Pump runs at maximum speed

12.5. Changing from recommended to alternative pump setting

Heating systems are relatively slow systems that cannot be set to the optimum operation within minutes or hours.
If the recommended pump setting does not give the desired distribution of heat in the rooms of the house, change the pump setting to the shown alternative.

12.6. Selecting the control modes

- **Variable differential pressure**
  We recommend Variable differential pressure mode in variable flow systems with relatively large pressure losses in the distribution pipes such as:
  - two-pipe heating systems with thermostatic valves and long distribution pipes.
  - two-pipe heating systems with thermostatic valves and high-pressure losses in system parts with total flow.
  - primary circuit pumps in systems with large pressure losses in the primary circuit.

  Note: Proportional-pressure mode is not recommended in heating systems that includes an automatic bypass valve to ensure a minimum flow for the heating appliances.
- **Constant differential pressure**
  We recommend constant differential pressure mode in variable flow systems with relatively small pressure losses in the distribution pipes such as:
  - two-pipe heating systems with thermostatic valves and dimensioned for natural circulation (former gravity systems).
  - two-pipe heating systems with thermostatic valves and low-pressure losses in system parts with total flow.
  - one-pipe heating systems with thermostatic valves or pipe balancing valves.
  - underfloor heating systems with zone valves.
  - primary circuit pumps in systems with small pressure losses in the primary circuit.
- **Constant speed**
  We recommend constant speed mode in constant-flow systems, where both a constant flow rate and a constant head are required, such as:
  - heat surfaces.
  - replacement for uncontrolled circulator pumps, for instance integrated in boilers.

12.7. Setting the product

The LED selection of control modes and corresponding pump curves takes place in clockwise succession.

- Press the operating button briefly (approx. 1 second). LEDs display the set control mode and pump curve.

The following shows the various possible settings (for example: constant speed / characteristic curve III):

- Pressing the button for the 9th time returns to the basic setting (constant speed / characteristic curve III).

Lock/unlock the button

To activate the key lock, press and hold the operating button for 8 seconds until the LEDs for the selected setting briefly flash, then release.

LEDs flash constantly at 1-second intervals.

The key lock is activated: pump settings can no longer be changed.

The key lock is deactivated in the same manner as it is activated.

NOTE: All settings/displays are retained if the power supply is interrupted

Activating factory setting

The factory setting is activated by pressing and holding the operating button whilst switching off the pump.

• Press and hold the operating button for at least 4 seconds.

- All LEDs flash for 1 second.
- The LEDs for the last setting flash for 1 second.

When the pump is switched on again, the pump runs using the factory settings (delivery condition).

13. Maintenance and Servicing

13.1. Maintenance Requirements

To ensure the continued optimum performance of the Lotus E300 heat unit it should be regularly maintained. Maintenance should be carried out by a competent person and any replacement parts used should be authorised Lotus E300 heat unit spare parts. It is recommended that maintenance is carried out annually and should include the checks detailed in the sections below. The primary system inhibitor concentration should also be checked and topped up if necessary.

Failure to have annual full maintenance carried out will invalidate the warranty.

Removing the front cover is <u>NOT</u> allowed other than by a Lotus® authorised person.

The user can wipe the surface of the door with detergent and check the operating modes or fill the heating system with water if the pressure gauge is low.

Operating times and maintenance dates are recorded in the microprocessor. When maintenance is due, the user is advised via the main front display.

13.2. Annual Full Maintenance Procedures

During regular inspection and maintenance, the following checks must be undertaken, recorded and held on file.

2.a) Check all electrical connections, checks the tightness of all connections and any signs of overheating.
2.b) Check the quality of the water in the heating system.
2.c) Clean the water filter and water pump. Check the operation of the system, including the 3-way valve and the start-up function of the heat unit.
2.d) Visual checks (Wear, tarnishing, burning etc.).
2.e) Check the pressure of the expansion vessel and re-pressurise if necessary.
2.f) Inspect and check the mechanical components for signs of leaks.
2.g) Measure and record the heat unit's electrical performance.
2.h) Drain the heat unit completely and follow the commissioning instructions to reinstate.
2.i) Measure and record the current drawn from the heat unit when operating in heating mode. Ensure the current drawn is between 25 and 32 amps. If the current drawn is outside of this parameter, then adjust the catalyst mix until the parameter is met.
2.j) Interior cleaning.
2.k) Read error codes, correcting the error (record the error and send it to the Lotus technical support if necessary).
2.l) Software update if necessary (Card replacement is done in service and not software download).

13.3. Operation of Primary System Safety Valve

3.a) Close the primary flow and return isolating valves
3.b) Slowly open the temperature and pressure relief valve by twisting its cap for a few seconds.
3.c) Check water is discharged and that it flows freely through the tundish and discharge pipework.
3.d) Release valve cap and check water flow stops and valve re-seats correctly.

13.4. Primary System Expansion Vessel Charge Pressure

4.a) Open the primary system pressure relief valve and allow water to flow until the system pressure gauge drops to zero.
4.b) Remove the dust cap from the primary system expansion vessel
4.c) Check the charge pressure of the vessel using a tyre pressure gauge. The pressure (with system de-pressurised) should be 1.0 to 1.2 bar. If lower than the required setting it should be re-charged using a tyre pump (Schrader valve type). DO NOT over charge. Re-check the charge pressure and when correct replace the dust cap.
4.d) Connect the filling loop. Open the filling loop isolating valves and allow system to re- pressurise to approx. 1.5 bar.
4.e) Close the filling loop isolating valves and remove the flexible hose.
4.f) Open the primary flow and return isolating valves.

13.5. Electrical Checks

5.a) Inspect all electrical terminations for signs of over-heating.
5.b) Check all earth bonding
5.c) Check all terminations are tight.
5.d) Check cable glands are tightened and grip cables securely.
5.e) Replace all panels before re-starting system.

14. Fault Finding and Servicing

14.1. Fault Finding

Any suspected faults should be brought to the attention of your Lotus® authorised person for investigation and rectification if necessary. Investigation of faults is NOT permitted by the user.

If the heat unit emits a buzzing noise and experiences reduced performance, it is likely that the heat unit is short of water and requires topping up. This must be done in accordance with the commissioning instructions previously outlined.

Always check the current draw after topping up and adjust the catalyst mixture to obtain the correct current.

When a hot tap is opened the TAP pictogram should appear on the screen. If this TAP pictogram fails to appear, check the flow sensor and pump are connected and working correctly.

14.2. Codes

Fault Code	Description
1113	Heat Unit temperature sensor error
1121	Room temperature sensor error
1141	DHW sensor error
1151	System pressure sensor error

14.3. System check

TURN OFF the electrical supply.

Press and hold the SET & WINTER buttons while the electrical supply is turned back on. Use the enter button to scroll through the various sensors to check for issues, if any faults are present you will not be able to move on and repairs must be undertaken by a competent person.

Press SET to complete.

The system check comprises of the following parameters;

14.4. Summary Safety Features

Description	Function	Effect
	Mechanical	
7 Litre feed and expansion tank with a 2 bar pressure relieve vent	To take any expansion within the heating system body of the water (7Ltr@2Bar)	This vessel contains air, as well as water from the central heating system. As the water heats up in the central heating system, it expands within this tank. Acting like a spring, the air that is present in the vessel compresses. In this way, it absorbs the extra pressure, helping to keep the system stable
1 Litre feed and expansion tank with a 1 bar pressure relieve vent	To take any expansion within the heating unit body of the water. (1Ltr@1Bar)	This vessel contains air, as well as water from the heating unit. As the water heats up in the central heating system, it expands within this tank. Acting like a spring, the air that is present in the vessel compresses. In this way, it absorbs the extra pressure, helping to keep the system stable
3 bar mechanical pressure reducing valve (PRV)	To overcome any overpressure issues on the sealed circuit side	Seal lifts and discharges over pressure and water to outside the unit by means of tundish.
	Electrical	
3 Amp fuse (PCB) (F1)	To protect on-board electronics and connections from main power surges.	Fuse will fail and cut power to the Main PCB and rest of heating unit.
Plasma Heating Source Temperature Sensor (S3)	To sense the temperature within the heating unit. Set at 90C if deviate from set point, fault is generated.	The boiler will lock out and display an error code advising sensor error (Fault Code 1113)
Overheat Thermostat 105C (T1)	To sense excessive temperature and protect the heating unit in the event of a fault, potential failure of Hydrogen Source Temperature Sensor (S3)	The boiler will lock. Secondary safety measure which if activated drops the neutral feed to the contactor coil, which

		feeds the electrodes and cuts power to the unit.
DHW Temperature Sensor (S4)	To sense DHW temperature, if sensor goes out of range or open circuit, the boiler goes into lockout	The boiler will lock out and display an error code advising sensor error (Fault Code 1141)
Room Temp Sensor (S2)	To sense room temperature and environment, if sensor goes out of range or open circuit, the boiler goes into lockout	The boiler will lock out and display an error code advising sensor error (Fault Code 1121)
Heating System Pressure Sensor (S6)	To sense system pressure, if the heating system pressure is too low the boiler will lock out and display an error code.	The boiler will lock out and display an error code advising sensor error (Fault Code 1151)

14.5. Protection Features:

5.a) Protection Function 1: Freeze protection of the boiler

This function protects the heat unit against frost. The device must be energized for this feature to be active. If the DHW temperature (NTC 17) drops below 5 0 C,

the circulation pump and the boiler run for 5 minutes.

5.b) Protection Function 2: Switching on the heating system protection

If the circulation pump does not run for more than 24 hours, the protection will trip and prevent the pump or valve from being pinched. This function extends the life of the pump in STAND-BY mode by preventing the pump from jamming. The pump runs once a day for 10 seconds.

5.c) Protection Function 3: Protection against overheating

The heat unit has an overheating safety thermostat set to 105 0 C. In case of overheating of the heat unit, the heat unit electricity is switched off independently of the control unit. This fault is shown in the display as critical fault "No.X" This fault may only be repaired by authorized service personnel.

5.d) Protection Function 4: Protection against low water pressure

The heat unit should be ON. When the mains water is cut off, a Check Valve is placed at the heat unit cold water inlet to prevent

discharge in the boiler or installation. When the pressure is low, an error message as “Low pressure in the heating system” is displayed.

5.e) Protection Function 5: Combination protection against high and low voltage

The controller is equipped with a function that deactivates the boiler if the voltage is less than 150 V or higher than 250 V. When the voltage is in the 150-250 V range, the heat unit returns to normal operation.

14.6. Pump Fault Finding:

The troubleshooting must only be carried out by a qualified specialist, and work on the electrical connection must only be carried out by a qualified

electricia
n.

Pump is not running although the power supply is switched on	Electrical fuse defective	Check fuses
	No voltage supply at pump	Rectify the power interruption
Noisy pump	Cavitation due to insufficient suction pressure	Increase the system pressure within the permissible range
Building does not warm up	Thermal output of the heating surfaces is too low	Check the delivery head and set it to a lower head if necessary
		Increase setpoint
		Change the control mode from Δp-c to Δp-v

Fault signals

- The fault signal LED indicates a fault.
- The pump switches off (depending on the fault) and attempts a cyclical restart.

Lights up red		Flashes red

Blocking

Flashes green

Contacting/winding

Under/overvoltage

Excessive module temperature

Short-circuit

Generator operation

Dry run

Overload

Rotor blocked

Winding defective

Power supply too low/high on mains side

Module interior too warm

Motor current too high

Water is flowing through the pump hydraulics, but there is no mains voltage at the pump

Air in the pump

Sluggish motor, pump is operated outside of its specifications (e.g. high module temperature). The speed is lower than during normal operation

Activate manual restart or contact customer service

Check mains voltage and operating conditions, and request customer service

Check the mains voltage, water quantity/pressure and the ambient conditions

Manual restart

- The pump attempts an automatic restart upon detecting a blockage.

If the pump does not restart automatically:

- Activate manual restart via the operating button:
  press and hold for 5 seconds, then release.
  - The restart function is initiated, and lasts max. 10 minutes.
  - The LEDs flash in succession clockwise.
  - To cancel, press and hold the operating button for 5 seconds.

NOTICE
After the restart, the LED display shows the previously set values of the pump.

If the fault cannot be remedied, contact a specialist technician or WILO customer services.

15. Replacement Parts

A range of replacement parts is available for the Lotus E300 heat unit unit. Refer to the following diagrams to aid in identifying the parts you require and the relevant Lotus order code. Only use genuine Lotus parts, the use of un-approved spare parts may render the warranty invalid.

Parts should be replaced by a competent person or authorised Lotus service engineers or agents.

Spears List:

Description	Product Code
Plate Heat Exchanger	
Hydro Block	
Pressure relieve valve	
Catalyst Reservoir	
Catalyst Reservoir expansion lid	
Expansion Vessel	
Main PCB	
Contactors	
Controller	
Circulation Pump	
De-stratification Pump	
Heat Exchanger Thermistor	
Kit	
Sensor Probe Kit	
Wiring Harness	

WARNING: DISCONNECT FROM ALL ELECTRICAL SUPPLIES BEFORE BEGINNING ANY WORK ON THE UNIT. THE PRIMARY HEATING CIRCUIT MAY BE VERY HOT – CARE MUST BE TAKEN TO AVOID SCALDING.

To remove any water carrying parts the system must first be drained. The primary circuit is not connected so must be drained separately. It is not necessary to drain the system for all servicing actions, those that require draining are indicated.

15.1. Draining the Lotus E300 heat unit Primary Circuit

To avoid draining the complete primary radiator or underfloor circuit the Lotus E300 heat unit primary circuit can be isolated by shutting off the primary circuit isolating valves fitted on the primary flow and return pipes

1.a) Relieve the system pressure by twisting the red cap located on the primary pressure relief valve.
1.b) Remove the sealing cap from the front of the primary drain valve and replace it with the hose connector supplied.
1.c) Attach a hose to the hose connector and secure in place with a hose clip. Place the discharge point of the hose at a point below the level of the Lotus E300 heat unit where the water drained will safely drain away.
1.d) Open the primary drain valve and allow the water to drain from the Primary circuit.

1.e) Water carrying parts attached to the Lotus E300 heat unit primary circuit can now be removed. However, take care when removing parts as some residual water may still be contained and this may be very hot.

15.2. Removing the Primary circulating pump

2.a) Switch off the power supply before starting any work on the product. Make sure that the power supply cannot be accidentally switched on.
2.b) Pull out the plug
2.c) Loosen the plug connector
2.d) The pump housing may be hot due to the pumped liquid being scalding hot. Close the isolating valves on both sides of the pump and wait for the pump housing to cool down
2.e) Before dismantling the pump, drain the system or close the isolating valves on both sides of the pump. The pumped liquid may be scalding hot and under high pressure.
2.f) Loosen the fittings.
2.g) Remove the pump from the system.
2.h) Replacement is a reversal of the above procedure. Ensure the pump sealing washers are correctly located before tightening union nuts. Ensure the correct electrical connections are made (Brown wire to “L” terminal, Blue wire to “N” terminal, Green/Yellow wire to “EARTH CONNECTION” terminal)..

15.3. Removing the Primary System Pressure Relief Valve

3.a) Drain primary circuit.
3.b) Unscrew the pressure gauge connection and remove from pressure relief valve body on the HB 112 Hydro block unit
3.c) Unscrew compression connections.
3.d) Remove pressure relief valve.
3.e) Replacement is a reversal of the above procedure. Ensure all connections are correctly made and tight.

15.4. Removing the Primary System Expansion Vessel

4.a) Drain primary circuit.
4.b) Unscrew bracket securing vessel in position and disconnect hose connections.
4.c) Lift expansion vessel from side of boiler. Note: the expansion vessel may contain some water, take care not to spill this into the product by lifting from the connection end of the vessel.
4.d) Replacement is a reversal of the above procedure. Ensure vessel is inserted into support nest the correct way up with the air valve towards the top. Ensure sealing washer is correctly fitted.

15.5. Removing the Lotus E300 heat unit Main Control PCB

5.a) Switch off the power supply before starting any work on the product. Make sure that the power supply cannot be accidentally switched on.
5.b) Remove front cover

5.c) Remove cover panel, top left corner
5.d) Making a note of their position for reference, disconnect the electrical connections to the anode & cathode on the heat exchanger.
5.e) Remove main electrical connections
5.f) Unclip both wiring harnesses
5.g) Undo 4 screws and washers and remove the main PCB plate
5.h) To fit the new main PCB, follow these instructions in reverse followed by the commissioning instructions

15.6. Removing the 2 amp Panel mounted fuses

6.a) Switch off the power supply before starting any work on the product. Make sure that the power supply cannot be accidentally switched on.
6.b) Remove front cover
6.c) Remove cover panel, top left corner
6.d) Pull out plastic fuse housing, fuse fitted within cover
6.e) To fit the new main fuse, place new fuse into housing and follow these instructions in reverse followed by the commissioning instructions

15.7. Removing the Lotus E300 heat unit Status Display PCB

7.a) Switch off the power supply before starting any work on the product. Make sure that the power supply cannot be accidentally switched on.
7.b) Remove front cover
7.c) Undo two screw connections underneath Status Display PCB
7.d) Unscrew back plate
7.e) Disconnect wiring harnesses and remove screen and PCB assembly
7.f) To fit the new Status display and control PCB, follow these instructions in reverse followed by the commissioning instructions

15.8. Removing the Plate Heat Exchanger

8.a) Switch off the power supply before starting any work on the product. Make sure that the power supply cannot be accidentally switched on.
8.b) Remove front cover
8.c) Undo two screw connections underneath Status Display PCB
8.d) Release the water from the heating system.
8.e) Remove the sensors from the heat exchanger.
8.f) Drain the water from the heat exchanger or cap off.
8.g) Loosen the jubilee clips from the flow and return connections and remove the hoses to the main heat exchanger.
8.h) Undo bottom pipe assemblies and release pressure relieve hose
8.i) Remove Plate Heat Exchanger assembly and remove plate heat exchanger.
8.j) To fit the new plate heat exchanger, follow these instructions in reverse followed by the commissioning instructions

15.9. Removing the Plasma Heating Unit Heat exchanger

9.a) Turn off the electrical supply.
9.b) Remove the keypad.
9.c) Release the water from the heating system.
9.d) Remove the sensors from the heat exchanger.
9.e) Drain the water from the heat exchanger or cap off.
9.f) Making a note of their position for reference, disconnect the electrical connections to the anode & cathode on the heat exchanger.
9.g) Curved tube heat exchanger should be changed with its basic case
9.h) Remove the middle case of plasma heating unit .
9.i) Remove heat exchanger and its basic case, the heat exchanger can not be removed. To fit the new heat exchanger with its basic case, follow these instructions in reverse followed by the commissioning instructions.

15.10. Removing the De-stratification pump

10.a) Turn off the electrical supply
10.b) Disconnect pump power supply on at contactor connections, on PCB left hand side, care to be taken regarding connection points to ensure cable points are not crossed over.
10.c) Drain the heating unit
10.d) Undo nut connection at pump base and head. Please note suction is taken from the top and circulated at the bottom on heating unit.
10.e) To fit the new heat exchanger, follow these instructions in reverse followed by the commissioning instructions

16. User Manual

16.1. Winter/ Summer Mode

Short self-test is performed at the moment of initial power-up. At the time of the first power-up, everything is closed, except “Protection function 1 and 2” (section 12.5: Protection features)

WINTER MODE:

Operate the reactor if the conditions are appropriate (see Operation lower and upper threshold table).

- The reactor temperature (regardless of the set point) is kept constant in the 80-90 range. (This value can be changed in the Factory Setting menu.)
- The circulation pump runs until you reach the set point
- The set point is referenced to the NTC / room thermostat.
- When the set point is reached, the circulation pump waits (Hysteresis + 2 C).
- “If the water flow switch is “1, the water path is switched to the water heating position by motorized valve 8.
- When the set point is reached, the motorized valve 8 is set to the heating position (Hysteresis + 2 C).
- If the conditions do not match, a Warning and / or Error code is sent to the display screen.

SUMMER MODE:

- Operate the reactor if the conditions are appropriate (see Operation lower and upper threshold table 2, below).
- The reactor temperature (regardless of the setpoint) is kept constant in the range 80-90. (This value can be changed in the Factory Setting menu.)
- The motorized valve is permanently placed in the water heating position.
- If the conditions do not match, a Warning and / or Error code is sent to the display screen.

Table 2. Operation lower and upper threshold

16.2. General Controls

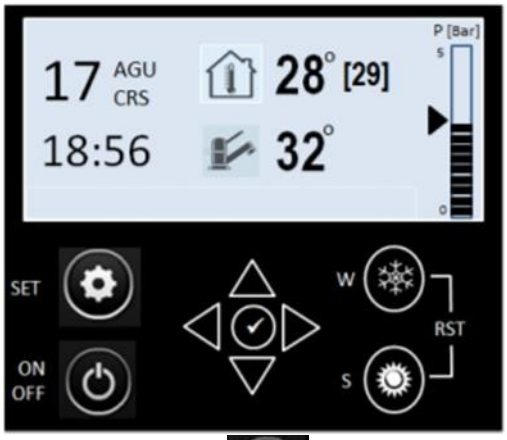

When the ON / OFF button is pressed [ON]:

- The LED of the corresponding button lights up.
- All functions and buttons are available.

Press the ON / OFF button again [OFF]:

- The LED of the corresponding button goes out.
- All functions and buttons are disabled, except for protection functions 1 and 2.

When SET button is pressed:

- The display shows only the heating temperature value. (Room thermostat icon, if available)
- Heating temperature adjustment is done with upper-lower buttons.
- Pressing the SET button once returns to the main screen.
- Activate the last setting if the "Maintain my last settings" option in the Settings menu is active. Initial start set value is 22 C.

When WINTER MODE button is pressed

- The LED of the corresponding button lights up.
- If the conditions do not match, send the Warning and / or Error code to the screen.

When the SUMMER MODE button is pressed

- The LED of the corresponding button lights up.
- If the conditions do not match, send the Warning and / or Error code to the screen.

If one of the WINTER and SUMMER MODE buttons is pressed, the other button is deactivated.

If WINTER and SUMMER MODE buttons are pressed together for 1 sec.;

+

- The LED of both buttons flash 3 times.
- Reset The processor is reset.
- Both buttons (mode) are deactivated.

If the WINTER and SUMMER MODE buttons are pressed together for 1 s while the child lock is activated, only the lock is released, and the pictogram goes away.

Pressing the ENTER button (navigation centre) switches to the MENU screen. Pressing it again will bring up the main display screen.

Switch to Delay Mode after 30 seconds of inactivity.

Delay Mode 10 min. active, then dimming until any key is pressed.

16.3. Menus

When the ENTER button (Navigation/Centre) is pressed, the MENU screen is displayed. Pressing it again or after 30 seconds of inactivity displays the main display screen. Switching between menus are done with the navigation keys. The preferences are shown in contrasts.

Main Menu

Selection	Mode	Description
Boiler Status	ON / OFF	Indicates if boiler is operational
Pump Status	ON / OFF	Indicates if the pump is operational
Automatic Prog. Status	ON / OFF	Provides information to user to indicate if the boiler is under automatic control or manual operation
Room Thermostat	ON / OFF	Indicates if the room thermostat is connected and operational
Turbo	ON / OFF	Indicates if the heating function has been overridden and continuous operation has been selected

Operational Information

Display	Unit	
Boiler temperature	°C	Indicates Heat Unit temperature
Heating temperature	°C	Indicates heating circuit temperature
Water temperature	°C	Indicates hot water temperature
Total Working Time	h/m/s	Indicates operational hours of heating unit
Total Boiler Operation Time	h/m/s	Indicates operational hours of heating unit
Future Maintenance Date	dd/mm/yyyy	Indicates next service visit date, set by installer at commissioning or service interval.

Auto Programme

Description

Select operating time interval and day of operation with built in time clock. There are 3 x 3hour operating time intervals a 6-hour time interval and a 9 hour time interval for all day operation. By altering the room set point overrides the time clock and runs to maintain set point.

Settings

Customer Setup

Display	Mode	Description
Keep recent settings	Y / N	Select to keep current settings or discard
Clock Setting	hh/mm/ss	Select and alter time clock
Language Selection	EN / EN	Select language setting (English preloaded and default)
Temperature Display	°C / °F	Select temperature option
Restore Factory Settings	Y / N	Restore factory settings

There is a futher settings menu selected when selecting ‘Restore Factory Settings, Y’ press the left arrow and bottom arrow simultaneously to activate advanced settings menu.

Update Maintenance date Date	DD/MM/YYYY	Set new service due
Clear Error Codes	Y/N	Clear error codes on the system
Select Boiler Mode	E100/ E200/E300	E300 is always selected
Boiler Temperature Set Limit	>90	Reaction time in degrees to be undertaken. i.e. a 5C drop before producing heat again
Exit Service Menu	Y/N	Select if want to cancel the settings.

Service Settings Setup

Display	Mode	Description
Room thermostat adjustment	Y / N	Select the option to change Room thermostat from internal sensor unit
Enter the service date and the next service date	DD/MM/YYYY	Set the service date and select next service date.
Recording and deleting error codes	Y / N	Selects the option of storing and collecting error codes

17. Warranty

This warranty is valid for 2 years from the date of commissioning. (There may be a maximum of 30 days between delivery date and commissioning date.) For this warranty to be valid, the first operation and interim periodical maintenance must be performed by authorised services. The warranty documents of the devices shall not be covered by the warranty unless they have been completed and approved by the Authorized Service Center.

The entire product, including all parts, is covered by the warranty during the warranty period. The maximum repair period is 20 (twenty) business days from the date of notification of the failure.

Existing legal regulations and rules must be followed exactly when selecting the installation location. The manufacturer cannot be held responsible for any negative conditions arising from non-compliance.

The warranty covers against faulty materials or manufacture provided that:

a) It has been correctly installed as per this document and all the relevant standards, regulations and codes of practice in force at the time.
b) It has not been modified in any way, other than by Lotus.
c) It has not been misused, tampered with or subjected to neglect.
d) It has only been used for the production of potable water and space heating.
e) The unit has been serviced annually.
f) The benchmark service record has been filled in after each annual service.
g) The guarantee period starts from the date of purchase which should be registered with Lotus.
h) The extended guarantee is not transferable, and rests with the original householder.
i) The system is fed from a public mains water supply.
j) Store temperatures do not exceed 70deg C.
k) Installations are made only in the UK, Channel Islands & Republic Of Ireland.
l) The water supply does not have a Chloride content greater than 250ppm.
m) Units are not installed with uncontrollable heat sources (E.g. Wood Burning Stoves).
n) The warranty card must be completed and sent back to Lotus as soon as possible for registration.

Warranty Exclusions

a) Damage to the boiler from poor or incorrect installation work.
b) Call out charges that have not been organised by Lotus
c) Water leaks into the boiler. All plumbing connections must be checked at installation and commissioning.
d) Damage caused to parts & equipment by scale build up or system debris / contamination is not covered by this warranty.
e) The unit has been installed in accordance with the Installation and service instructions and all relevant codes of practice and regulations in force at the time of installation, and that all necessary controls and safety valves have been fitted correctly.
f) Any valves and controls fitted are of Lotus recommended type and specification.
g) The unit has not been modified or tampered with in any way and has been regularly maintained as detailed in these instructions.

h) The primary water circuit has been flushed and treated with a suitable inhibitor and is used only for domestic heating purposes.
i) Within 60 days of installation the user completes and returns the

guarantee Registration card supplied with the unit in order to register the product.

Periodic loss of charge pressure from the expansion vessels is normal (indicated by an intermittent discharge of water from the expansion or primary pressure relief valves) and is not covered under the product guarantee.

Ferhatpaşa mah. 4. sok. No:28/A3 Ataşehir /İstanbul 34888 info@ulet.com.tr